GB标准气动法兰截止阀 ZTJ641H(W、F、Y)-PN25~40
GB Standard Pneumatic Flange Connecting Globe Valve

主要外形及连接法兰尺寸 ZTJ641H(W、F、Y)-25C/P/R Main Outline and Connecting Flange Size

公称通径 Nominal diameter DN	外形尺寸 Outline Size		连接法兰尺寸 Connecting Flange Size							气源接口 Air Source Interface
	L	~H	D	D_1	D_2	C	f	N	Φd	
15	130	291	95	65	46	14	2	4	14	1/4"
20	150	300	105	75	56	16	2	4	14	
25	160	353	115	85	65	16	2	4	14	
32	180	390	140	100	76	18	2	4	18	
40	200	518	150	110	84	18	3	4	18	
50	230	555	165	125	99	20	3	4	18	
65	290	630	185	145	118	22	3	8	18	
80	310	683	200	160	132	24	3	8	18	
100	350	745	235	190	156	24	3	8	22	3/8"
125	400	855	270	220	184	26	3	8	26	
150	480	870	300	250	211	28	3	8	26	
200	600	954	360	310	274	30	3	12	26	
250	730	1065	425	370	330	32	3	12	30	
300	850	1185	485	430	389	34	4	16	30	

主要外形及连接法兰尺寸 ZTJ641H(W、F、Y)-40C/P/R Main Outline and Connecting Flange Size

公称通径 Nominal diameter DN	外形尺寸 Outline Size		连接法兰尺寸 Connecting Flange Size									气源接口 Air Source Interface
	L	~H	D	D_1	D_2	C	f	N	Φd	D_3	X	
15	130	305	95	65	46	14	2	4	14	40	4	1/4"
20	150	316	105	75	56	16	2	4	14	51	4	
25	160	373	115	85	65	16	2	4	14	58	4	
32	180	416	140	100	76	18	2	4	18	66	4	
40	200	530	150	110	84	18	3	4	18	76	4	
50	230	575	165	125	99	20	3	4	18	88	4	
65	290	656	185	145	118	22	3	8	18	110	4	
80	310	713	200	160	132	24	3	8	18	121	4	
100	350	775	235	190	156	24	3	8	22	150	4.5	3/8"
125	400	892	270	220	184	26	3	8	26	176	4.5	
150	480	940	300	250	211	28	3	8	26	204	4.5	
200	600	1054	375	320	284	34	3	12	30	260	4.5	
250	730	1115	450	385	345	38	3	12	33	313	4.5	
300	850	1235	515	450	409	42	4	16	33	364	4.5	

注：根据不同的阀门扭矩、使用介质选配，不同的执行器型号，其相关尺寸随之变化。
Note:The relative sizes are subject to change responding to difference in valve torque, medium and actuator model.

GB标准气动法兰截止阀 ZTJ641H(W、F、Y)-PN16
GB Standard Pneumatic Flange Connecting Globe Valve

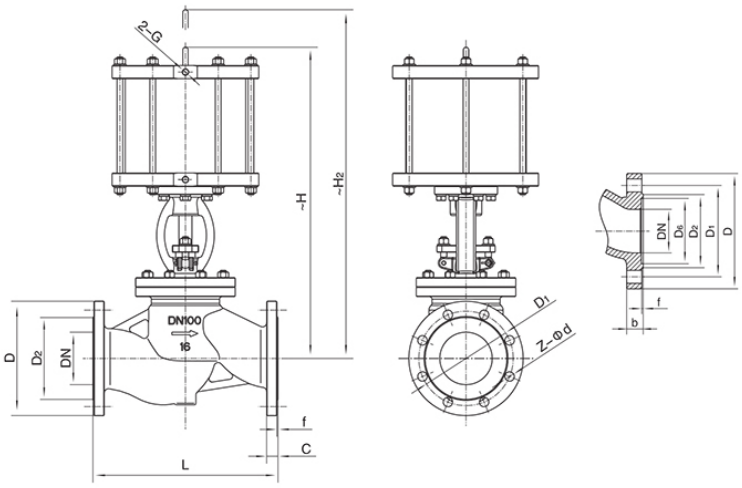

主要外形及连接法兰尺寸 ZTJ641H(W、F、Y)-16C/P/R Main Outline and Connecting Flange Size

公称通径 Nominal diameter DN	外形尺寸 Outline Size		连接法兰尺寸 Connecting Flange Size							气源接口 Air Source Interface
	L	~H	D	D_1	D_2	C	f	N	Φd	
15	130	291	95	65	46	14	2	4	14	1/4"
20	150	300	105	75	56	16	2	4	14	
25	160	353	115	85	65	16	2	4	14	
32	180	390	140	100	76	18	2	4	18	
40	200	518	150	110	84	18	3	4	18	
50	230	555	165	125	99	20	3	4	18	
65	290	630	185	145	118	20	3	4	18	
80	310	683	200	160	132	20	3	8	18	
100	350	745	220	180	156	22	3	8	18	3/8"
125	400	855	250	210	184	22	3	8	18	
150	480	870	285	240	211	24	3	8	22	
200	600	954	340	295	266	24	3	12	22	
250	730	1065	405	355	319	26	3	12	26	
300	850	1185	460	410	370	28	4	12	26	

注：根据不同的阀门扭矩、使用介质选配，不同的执行器型号，其相关尺寸随之变化。
Note:The relative sizes are subject to change responding to difference in valve torque, medium and actuator model.

ANSI标准气动法兰截止阀 ZTJ641H(W、F、Y)-Class150~600
ANSI Standard Pneumatic Flange Connecting Globe Valve

技术规范 Technique norm

设计依据 Design Basis		ANSI标准 Standard
设计标准 Design standard		ANSI B16.34、BS1873
结构长度 Face to face dimension	法兰连接 Flange connecting	ANSI B16.10
连接法兰尺寸 Connecting Flange Size		ANSI B16.5
试验和检验 Test & inspection		API 598

注：系列截止阀结构长度及连接法兰尺寸可根据用户要求设计制造。
Note：The structural length and connecting flange size of globe valve series can be designed and manufactured as per users' requirements.

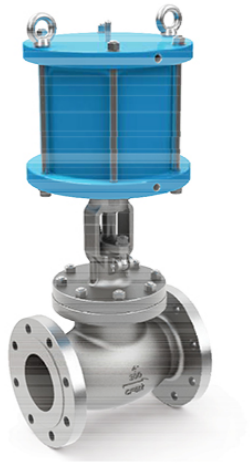

主要零件材质表 Form of Main Parts Materials

序号 No.	零件名称 Name of parts	材 质 Material		
		C	P	R
1	阀体 Body	A216-WCB	A351-CF8	A351-CF8M
2	垫片 Gasket	柔 石墨+不锈钢 Graphite+Stainless Steel	PTFE	PTFE
3	螺栓 Screw	A193-B7	A276-304	A276-316
4	阀瓣 Disc	A216-WCB+堆焊 A276-304或stelite PTFE	A351-CF8 PTFE	A351-CF8M PTFE
5	对开环 Split ring	A182-F304	A276-304	A276-316
6	阀瓣盖 Disc cover	A182-F304	A276-304	A276-316
7	阀杆 Stem	A276-410	A276-304	A276-316
8	螺帽 Scrwe Cap	A194-2H	A276-304	A276-316
9	吊环螺栓 Lifting Ring Screw	A192-2H	A276-304	A276-316
10	阀盖 Cover	A216-WCB	A351-CF8	A351-CF8M
11	螺栓 Screw	A194-2H	A276-304	A276-316
12	垫片 Gasket	A194-2H	A276-304	A276-316
13	填料 Packing	柔 石墨 Graphite	PTFE	PTFE
14	填料压盖 Packing Plate	A216-WCB	A351-CF8	A351-CF8M
15	螺帽 Screw Cap	A194-2H	A276-304	A276-316

※注：系列截止阀主要零部件及密封密封阀座的材质可根据实际工况条件或用户特殊要求设计选用。
Note：The main spare parts and sealed seat material of globe valve series can be designed for options as per users' special requirements.

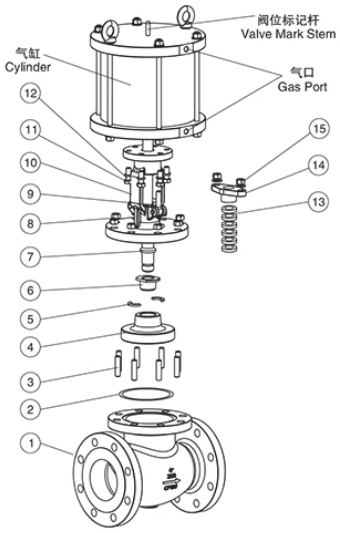

GB标准气动法兰截止阀 ZTJ641H(W、F、Y)-PN25~40
GB Standard Pneumatic Flange Connecting Globe Valve

主要外形及连接法兰尺寸 ZTJ641H(W、F、Y)-25C/P/R Main Outline and Connecting Flange Size

公称通径 Nominal diameter DN	外形尺寸 Outline Size		连接法兰尺寸 Connecting Flange Size							气源接口 Air Source Interface
	L	~H	D	D_1	D_2	C	f	N	Φd	
15	130	291	95	65	46	14	2	4	14	1/4"
20	150	300	105	75	56	16	2	4	14	
25	160	353	115	85	65	16	2	4	14	
32	180	390	140	100	76	18	2	4	18	
40	200	518	150	110	84	18	3	4	18	
50	230	555	165	125	99	20	3	4	18	
65	290	630	185	145	118	22	3	8	18	
80	310	683	200	160	132	24	3	8	18	
100	350	745	235	190	156	24	3	8	22	3/8"
125	400	855	270	220	184	26	3	8	26	
150	480	870	300	250	211	28	3	8	26	
200	600	954	360	310	274	30	3	12	26	
250	730	1065	425	370	330	32	3	12	30	
300	850	1185	485	430	389	34	4	16	30	

主要外形及连接法兰尺寸 ZTJ641H(W、F、Y)-40C/P/R Main Outline and Connecting Flange Size

公称通径 Nominal diameter DN	外形尺寸 Outline Size		连接法兰尺寸 Connecting Flange Size									气源接口 Air Source Interface
	L	~H	D	D_1	D_2	C	f	N	Φd	D_3	X	
15	130	305	95	65	46	14	2	4	14	40	4	1/4"
20	150	316	105	75	56	16	2	4	14	51	4	
25	160	373	115	85	65	16	2	4	14	58	4	
32	180	416	140	100	76	18	2	4	18	66	4	
40	200	530	150	110	84	18	3	4	18	76	4	
50	230	575	165	125	99	20	3	4	18	88	4	
65	290	656	185	145	118	22	3	8	18	110	4	
80	310	713	200	160	132	24	3	8	18	121	4	
100	350	775	235	190	156	24	3	8	22	150	4.5	3/8"
125	400	892	270	220	184	26	3	8	26	176	4.5	
150	480	940	300	250	211	28	3	8	26	204	4.5	
200	600	1054	375	320	284	34	3	12	30	260	4.5	
250	730	1115	450	385	345	38	3	12	33	313	4.5	
300	850	1235	515	450	409	42	4	16	33	364	4.5	

注：根据不同的阀门扭矩、使用介质选配，不同的执行器型号，其相关尺寸随之变化。
Note:The relative sizes are subject to change responding to difference in valve torque, medium and actuator model.

GB标准气动法兰截止阀 ZTJ641H(W、F、Y)-PN16
GB Standard Pneumatic Flange Connecting Globe Valve

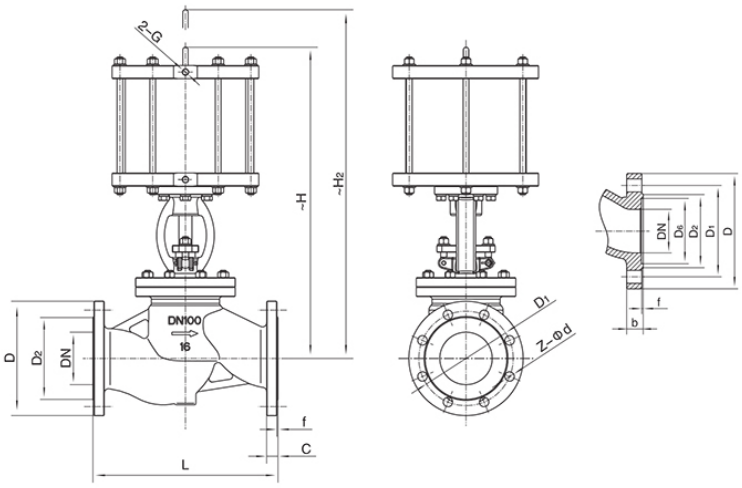

主要外形及连接法兰尺寸 ZTJ641H(W、F、Y)-16C/P/R Main Outline and Connecting Flange Size

公称通径 Nominal diameter DN	外形尺寸 Outline Size		连接法兰尺寸 Connecting Flange Size							气源接口 Air Source Interface
	L	~H	D	D_1	D_2	C	f	N	Φd	
15	130	291	95	65	46	14	2	4	14	1/4"
20	150	300	105	75	56	16	2	4	14	
25	160	353	115	85	65	16	2	4	14	
32	180	390	140	100	76	18	2	4	18	
40	200	518	150	110	84	18	3	4	18	
50	230	555	165	125	99	20	3	4	18	
65	290	630	185	145	118	20	3	4	18	
80	310	683	200	160	132	20	3	8	18	
100	350	745	220	180	156	22	3	8	18	3/8"
125	400	855	250	210	184	22	3	8	18	
150	480	870	285	240	211	24	3	8	22	
200	600	954	340	295	266	24	3	12	22	
250	730	1065	405	355	319	26	3	12	26	
300	850	1185	460	410	370	28	4	12	26	

注：根据不同的阀门扭矩、使用介质选配，不同的执行器型号，其相关尺寸随之变化。
Note:The relative sizes are subject to change responding to difference in valve torque, medium and actuator model.

ANSI标准气动法兰截止阀 ZTJ641H(W、F、Y)-Class150~600
ANSI Standard Pneumatic Flange Connecting Globe Valve

技术规范 Technique norm

设计依据 Design Basis		ANSI标准 Standard
设计标准 Design standard		ANSI B16.34、BS1873
结构长度 Face to face dimension	法兰连接 Flange connecting	ANSI B16.10
连接法兰尺寸 Connecting Flange Size		ANSI B16.5
试验和检验 Test & inspection		API 598

注：系列截止阀结构长度及连接法兰尺寸可根据用户要求设计制造。
Note：The structural length and connecting flange size of globe valve series can be designed and manufactured as per users' requirements.

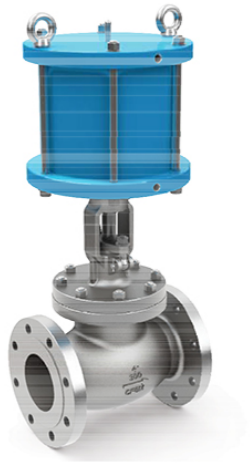

主要零件材质表 Form of Main Parts Materials

序号 No.	零件名称 Name of parts	材 质 Material		
		C	P	R
1	阀体 Body	A216-WCB	A351-CF8	A351-CF8M
2	垫片 Gasket	柔 石墨+不锈钢 Graphite+Stainless Steel	PTFE	PTFE
3	螺栓 Screw	A193-B7	A276-304	A276-316
4	阀瓣 Disc	A216-WCB+堆焊 A276-304或stelite PTFE	A351-CF8 PTFE	A351-CF8M PTFE
5	对开环 Split ring	A182-F304	A276-304	A276-316
6	阀瓣盖 Disc cover	A182-F304	A276-304	A276-316
7	阀杆 Stem	A276-410	A276-304	A276-316
8	螺帽 Scrwe Cap	A194-2H	A276-304	A276-316
9	吊环螺栓 Lifting Ring Screw	A192-2H	A276-304	A276-316
10	阀盖 Cover	A216-WCB	A351-CF8	A351-CF8M
11	螺栓 Screw	A194-2H	A276-304	A276-316
12	垫片 Gasket	A194-2H	A276-304	A276-316
13	填料 Packing	柔 石墨 Graphite	PTFE	PTFE
14	填料压盖 Packing Plate	A216-WCB	A351-CF8	A351-CF8M
15	螺帽 Screw Cap	A194-2H	A276-304	A276-316

※注：系列截止阀主要零部件及密封密封阀座的材质可根据实际工况条件或用户特殊要求设计选用。
Note：The main spare parts and sealed seat material of globe valve series can be designed for options as per users' special requirements.

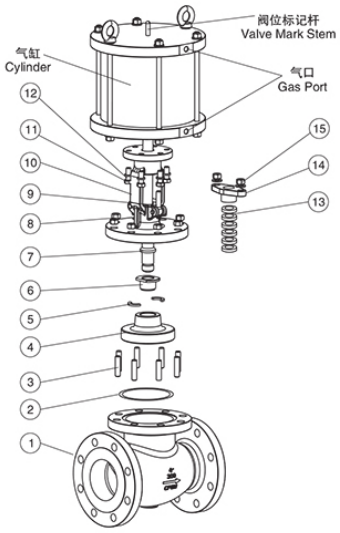

GB标准气动法兰截止阀 ZTJ641H(W、F、Y)-PN25~40
GB Standard Pneumatic Flange Connecting Globe Valve

主要外形及连接法兰尺寸 ZTJ641H(W、F、Y)-25C/P/R Main Outline and Connecting Flange Size

公称通径 Nominal diameter DN	外形尺寸 Outline Size		连接法兰尺寸 Connecting Flange Size							气源接口 Air Source Interface
	L	~H	D	D_1	D_2	C	f	N	Φd	
15	130	291	95	65	46	14	2	4	14	1/4"
20	150	300	105	75	56	16	2	4	14	
25	160	353	115	85	65	16	2	4	14	
32	180	390	140	100	76	18	2	4	18	
40	200	518	150	110	84	18	3	4	18	
50	230	555	165	125	99	20	3	4	18	
65	290	630	185	145	118	22	3	8	18	
80	310	683	200	160	132	24	3	8	18	
100	350	745	235	190	156	24	3	8	22	3/8"
125	400	855	270	220	184	26	3	8	26	
150	480	870	300	250	211	28	3	8	26	
200	600	954	360	310	274	30	3	12	26	
250	730	1065	425	370	330	32	3	12	30	
300	850	1185	485	430	389	34	4	16	30	

主要外形及连接法兰尺寸 ZTJ641H(W、F、Y)-40C/P/R Main Outline and Connecting Flange Size

公称通径 Nominal diameter DN	外形尺寸 Outline Size		连接法兰尺寸 Connecting Flange Size									气源接口 Air Source Interface
	L	~H	D	D_1	D_2	C	f	N	Φd	D_3	X	
15	130	305	95	65	46	14	2	4	14	40	4	1/4"
20	150	316	105	75	56	16	2	4	14	51	4	
25	160	373	115	85	65	16	2	4	14	58	4	
32	180	416	140	100	76	18	2	4	18	66	4	
40	200	530	150	110	84	18	3	4	18	76	4	
50	230	575	165	125	99	20	3	4	18	88	4	
65	290	656	185	145	118	22	3	8	18	110	4	
80	310	713	200	160	132	24	3	8	18	121	4	
100	350	775	235	190	156	24	3	8	22	150	4.5	3/8"
125	400	892	270	220	184	26	3	8	26	176	4.5	
150	480	940	300	250	211	28	3	8	26	204	4.5	
200	600	1054	375	320	284	34	3	12	30	260	4.5	
250	730	1115	450	385	345	38	3	12	33	313	4.5	
300	850	1235	515	450	409	42	4	16	33	364	4.5	

注：根据不同的阀门扭矩、使用介质选配，不同的执行器型号，其相关尺寸随之变化。
Note:The relative sizes are subject to change responding to difference in valve torque, medium and actuator model.

GB标准气动法兰截止阀 ZTJ641H(W、F、Y)-PN16
GB Standard Pneumatic Flange Connecting Globe Valve

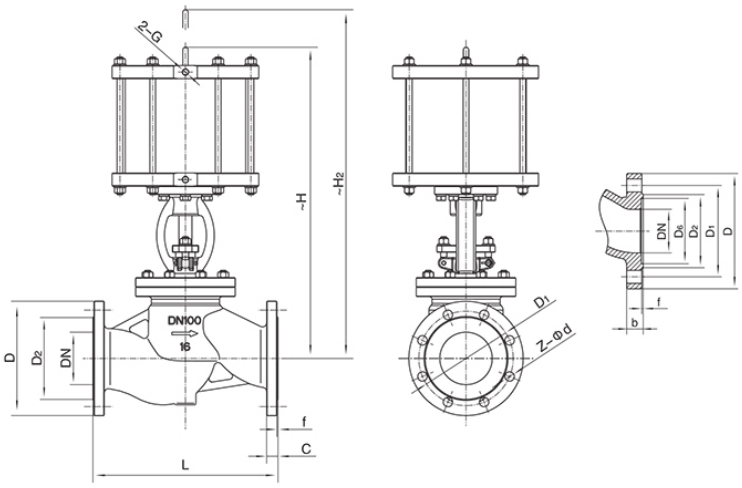

主要外形及连接法兰尺寸 ZTJ641H(W、F、Y)-16C/P/R Main Outline and Connecting Flange Size

公称通径 Nominal diameter DN	外形尺寸 Outline Size		连接法兰尺寸 Connecting Flange Size							气源接口 Air Source Interface
	L	~H	D	D_1	D_2	C	f	N	Φd	
15	130	291	95	65	46	14	2	4	14	1/4"
20	150	300	105	75	56	16	2	4	14	
25	160	353	115	85	65	16	2	4	14	
32	180	390	140	100	76	18	2	4	18	
40	200	518	150	110	84	18	3	4	18	
50	230	555	165	125	99	20	3	4	18	
65	290	630	185	145	118	20	3	4	18	
80	310	683	200	160	132	20	3	8	18	
100	350	745	220	180	156	22	3	8	18	3/8"
125	400	855	250	210	184	22	3	8	18	
150	480	870	285	240	211	24	3	8	22	
200	600	954	340	295	266	24	3	12	22	
250	730	1065	405	355	319	26	3	12	26	
300	850	1185	460	410	370	28	4	12	26	

注：根据不同的阀门扭矩、使用介质选配，不同的执行器型号，其相关尺寸随之变化。
Note:The relative sizes are subject to change responding to difference in valve torque, medium and actuator model.

ANSI标准气动法兰截止阀 ZTJ641H(W、F、Y)-Class150~600
ANSI Standard Pneumatic Flange Connecting Globe Valve

技术规范 Technique norm

设计依据 Design Basis		ANSI标准 Standard
设计标准 Design standard		ANSI B16.34、BS1873
结构长度 Face to face dimension	法兰连接 Flange connecting	ANSI B16.10
连接法兰尺寸 Connecting Flange Size		ANSI B16.5
试验和检验 Test & inspection		API 598

注：系列截止阀结构长度及连接法兰尺寸可根据用户要求设计制造。
Note：The structural length and connecting flange size of globe valve series can be designed and manufactured as per users' requirements.

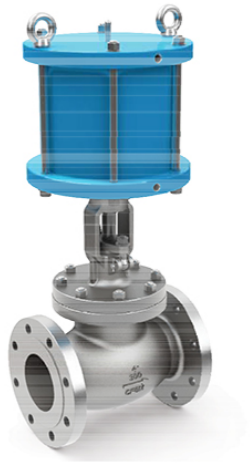

主要零件材质表 Form of Main Parts Materials

序号 No.	零件名称 Name of parts	材 质 Material		
		C	P	R
1	阀体 Body	A216-WCB	A351-CF8	A351-CF8M
2	垫片 Gasket	柔 石墨+不锈钢 Graphite+Stainless Steel	PTFE	PTFE
3	螺栓 Screw	A193-B7	A276-304	A276-316
4	阀瓣 Disc	A216-WCB+堆焊 A276-304或stelite PTFE	A351-CF8 PTFE	A351-CF8M PTFE
5	对开环 Split ring	A182-F304	A276-304	A276-316
6	阀瓣盖 Disc cover	A182-F304	A276-304	A276-316
7	阀杆 Stem	A276-410	A276-304	A276-316
8	螺帽 Scrwe Cap	A194-2H	A276-304	A276-316
9	吊环螺栓 Lifting Ring Screw	A192-2H	A276-304	A276-316
10	阀盖 Cover	A216-WCB	A351-CF8	A351-CF8M
11	螺栓 Screw	A194-2H	A276-304	A276-316
12	垫片 Gasket	A194-2H	A276-304	A276-316
13	填料 Packing	柔 石墨 Graphite	PTFE	PTFE
14	填料压盖 Packing Plate	A216-WCB	A351-CF8	A351-CF8M
15	螺帽 Screw Cap	A194-2H	A276-304	A276-316

※注：系列截止阀主要零部件及密封密封阀座的材质可根据实际工况条件或用户特殊要求设计选用。
Note：The main spare parts and sealed seat material of globe valve series can be designed for options as per users' special requirements.

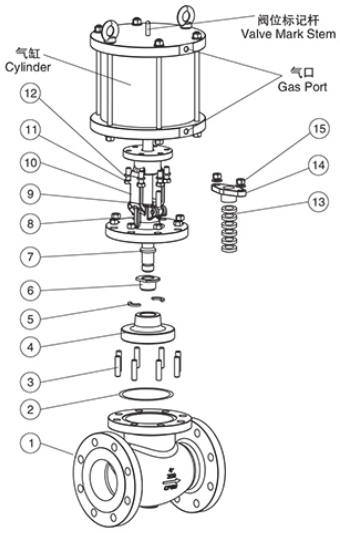

GB标准气动法兰截止阀 ZTJ641H(W、F、Y)-PN25~40
GB Standard Pneumatic Flange Connecting Globe Valve

主要外形及连接法兰尺寸 ZTJ641H(W、F、Y)-25C/P/R Main Outline and Connecting Flange Size

公称通径 Nominal diameter DN	外形尺寸 Outline Size		连接法兰尺寸 Connecting Flange Size							气源接口 Air Source Interface
	L	~H	D	D_1	D_2	C	f	N	Φd	
15	130	291	95	65	46	14	2	4	14	1/4"
20	150	300	105	75	56	16	2	4	14	
25	160	353	115	85	65	16	2	4	14	
32	180	390	140	100	76	18	2	4	18	
40	200	518	150	110	84	18	3	4	18	
50	230	555	165	125	99	20	3	4	18	
65	290	630	185	145	118	22	3	8	18	
80	310	683	200	160	132	24	3	8	18	
100	350	745	235	190	156	24	3	8	22	3/8"
125	400	855	270	220	184	26	3	8	26	
150	480	870	300	250	211	28	3	8	26	
200	600	954	360	310	274	30	3	12	26	
250	730	1065	425	370	330	32	3	12	30	
300	850	1185	485	430	389	34	4	16	30	

主要外形及连接法兰尺寸 ZTJ641H(W、F、Y)-40C/P/R Main Outline and Connecting Flange Size

公称通径 Nominal diameter DN	外形尺寸 Outline Size		连接法兰尺寸 Connecting Flange Size									气源接口 Air Source Interface
	L	~H	D	D_1	D_2	C	f	N	Φd	D_3	X	
15	130	305	95	65	46	14	2	4	14	40	4	1/4"
20	150	316	105	75	56	16	2	4	14	51	4	
25	160	373	115	85	65	16	2	4	14	58	4	
32	180	416	140	100	76	18	2	4	18	66	4	
40	200	530	150	110	84	18	3	4	18	76	4	
50	230	575	165	125	99	20	3	4	18	88	4	
65	290	656	185	145	118	22	3	8	18	110	4	
80	310	713	200	160	132	24	3	8	18	121	4	
100	350	775	235	190	156	24	3	8	22	150	4.5	3/8"
125	400	892	270	220	184	26	3	8	26	176	4.5	
150	480	940	300	250	211	28	3	8	26	204	4.5	
200	600	1054	375	320	284	34	3	12	30	260	4.5	
250	730	1115	450	385	345	38	3	12	33	313	4.5	
300	850	1235	515	450	409	42	4	16	33	364	4.5	

注：根据不同的阀门扭矩、使用介质选配，不同的执行器型号，其相关尺寸随之变化。
Note:The relative sizes are subject to change responding to difference in valve torque, medium and actuator model.

GB标准气动法兰截止阀 ZTJ641H(W、F、Y)-PN16
GB Standard Pneumatic Flange Connecting Globe Valve

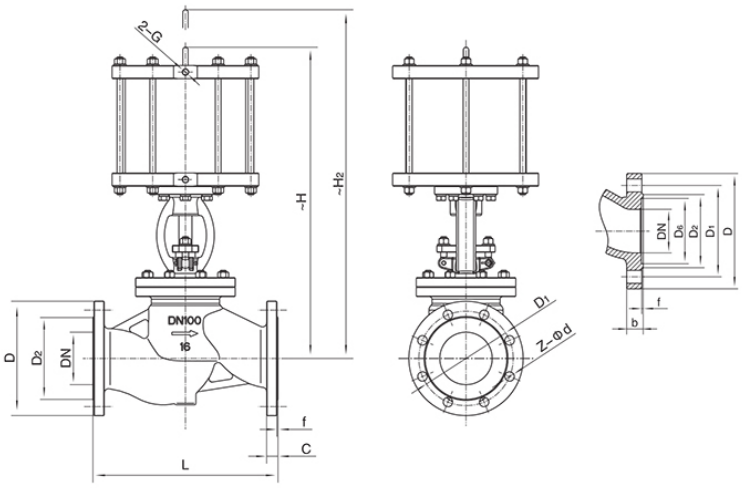

主要外形及连接法兰尺寸 ZTJ641H(W、F、Y)-16C/P/R Main Outline and Connecting Flange Size

公称通径 Nominal diameter DN	外形尺寸 Outline Size		连接法兰尺寸 Connecting Flange Size							气源接口 Air Source Interface
	L	~H	D	D_1	D_2	C	f	N	Φd	
15	130	291	95	65	46	14	2	4	14	1/4"
20	150	300	105	75	56	16	2	4	14	
25	160	353	115	85	65	16	2	4	14	
32	180	390	140	100	76	18	2	4	18	
40	200	518	150	110	84	18	3	4	18	
50	230	555	165	125	99	20	3	4	18	
65	290	630	185	145	118	20	3	4	18	
80	310	683	200	160	132	20	3	8	18	
100	350	745	220	180	156	22	3	8	18	3/8"
125	400	855	250	210	184	22	3	8	18	
150	480	870	285	240	211	24	3	8	22	
200	600	954	340	295	266	24	3	12	22	
250	730	1065	405	355	319	26	3	12	26	
300	850	1185	460	410	370	28	4	12	26	

注：根据不同的阀门扭矩、使用介质选配，不同的执行器型号，其相关尺寸随之变化。
Note:The relative sizes are subject to change responding to difference in valve torque, medium and actuator model.

ANSI标准气动法兰截止阀 ZTJ641H(W、F、Y)-Class150~600
ANSI Standard Pneumatic Flange Connecting Globe Valve

技术规范 Technique norm

设计依据 Design Basis		ANSI标准 Standard
设计标准 Design standard		ANSI B16.34、BS1873
结构长度 Face to face dimension	法兰连接 Flange connecting	ANSI B16.10
连接法兰尺寸 Connecting Flange Size		ANSI B16.5
试验和检验 Test & inspection		API 598

注：系列截止阀结构长度及连接法兰尺寸可根据用户要求设计制造。
Note：The structural length and connecting flange size of globe valve series can be designed and manufactured as per users' requirements.

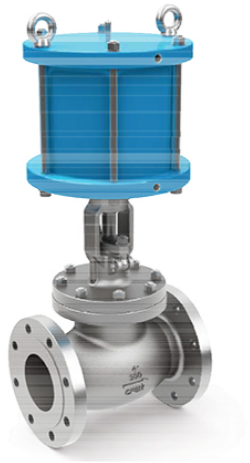

主要零件材质表 Form of Main Parts Materials

序号 No.	零件名称 Name of parts	材 质 Material		
		C	P	R
1	阀体 Body	A216-WCB	A351-CF8	A351-CF8M
2	垫片 Gasket	柔 石墨+不锈钢 Graphite+Stainless Steel	PTFE	PTFE
3	螺栓 Screw	A193-B7	A276-304	A276-316
4	阀瓣 Disc	A216-WCB+堆焊 A276-304或stelite PTFE	A351-CF8 PTFE	A351-CF8M PTFE
5	对开环 Split ring	A182-F304	A276-304	A276-316
6	阀瓣盖 Disc cover	A182-F304	A276-304	A276-316
7	阀杆 Stem	A276-410	A276-304	A276-316
8	螺帽 Scrwe Cap	A194-2H	A276-304	A276-316
9	吊环螺栓 Lifting Ring Screw	A192-2H	A276-304	A276-316
10	阀盖 Cover	A216-WCB	A351-CF8	A351-CF8M
11	螺栓 Screw	A194-2H	A276-304	A276-316
12	垫片 Gasket	A194-2H	A276-304	A276-316
13	填料 Packing	柔 石墨 Graphite	PTFE	PTFE
14	填料压盖 Packing Plate	A216-WCB	A351-CF8	A351-CF8M
15	螺帽 Screw Cap	A194-2H	A276-304	A276-316

※注：系列截止阀主要零部件及密封密封阀座的材质可根据实际工况条件或用户特殊要求设计选用。
Note：The main spare parts and sealed seat material of globe valve series can be designed for options as per users' special requirements.

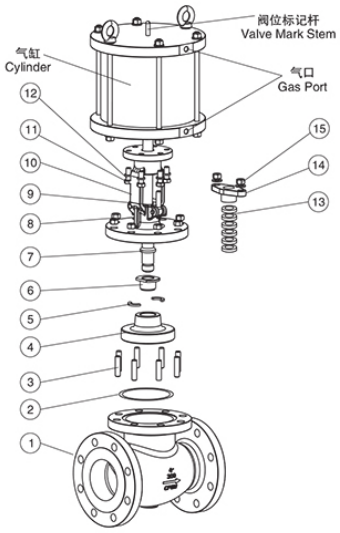

GB标准气动法兰截止阀 ZTJ641H(W、F、Y)-PN25~40
GB Standard Pneumatic Flange Connecting Globe Valve

主要外形及连接法兰尺寸 ZTJ641H(W、F、Y)-25C/P/R Main Outline and Connecting Flange Size

公称通径 Nominal diameter DN	外形尺寸 Outline Size		连接法兰尺寸 Connecting Flange Size							气源接口 Air Source Interface
	L	~H	D	D_1	D_2	C	f	N	Φd	
15	130	291	95	65	46	14	2	4	14	1/4"
20	150	300	105	75	56	16	2	4	14	
25	160	353	115	85	65	16	2	4	14	
32	180	390	140	100	76	18	2	4	18	
40	200	518	150	110	84	18	3	4	18	
50	230	555	165	125	99	20	3	4	18	
65	290	630	185	145	118	22	3	8	18	
80	310	683	200	160	132	24	3	8	18	
100	350	745	235	190	156	24	3	8	22	3/8"
125	400	855	270	220	184	26	3	8	26	
150	480	870	300	250	211	28	3	8	26	
200	600	954	360	310	274	30	3	12	26	
250	730	1065	425	370	330	32	3	12	30	
300	850	1185	485	430	389	34	4	16	30	

主要外形及连接法兰尺寸 ZTJ641H(W、F、Y)-40C/P/R Main Outline and Connecting Flange Size

公称通径 Nominal diameter DN	外形尺寸 Outline Size		连接法兰尺寸 Connecting Flange Size									气源接口 Air Source Interface
	L	~H	D	D_1	D_2	C	f	N	Φd	D_3	X	
15	130	305	95	65	46	14	2	4	14	40	4	1/4"
20	150	316	105	75	56	16	2	4	14	51	4	
25	160	373	115	85	65	16	2	4	14	58	4	
32	180	416	140	100	76	18	2	4	18	66	4	
40	200	530	150	110	84	18	3	4	18	76	4	
50	230	575	165	125	99	20	3	4	18	88	4	
65	290	656	185	145	118	22	3	8	18	110	4	
80	310	713	200	160	132	24	3	8	18	121	4	
100	350	775	235	190	156	24	3	8	22	150	4.5	3/8"
125	400	892	270	220	184	26	3	8	26	176	4.5	
150	480	940	300	250	211	28	3	8	26	204	4.5	
200	600	1054	375	320	284	34	3	12	30	260	4.5	
250	730	1115	450	385	345	38	3	12	33	313	4.5	
300	850	1235	515	450	409	42	4	16	33	364	4.5	

注：根据不同的阀门扭矩、使用介质选配，不同的执行器型号，其相关尺寸随之变化。
Note:The relative sizes are subject to change responding to difference in valve torque, medium and actuator model.

GB标准气动法兰截止阀 ZTJ641H(W、F、Y)-PN16
GB Standard Pneumatic Flange Connecting Globe Valve

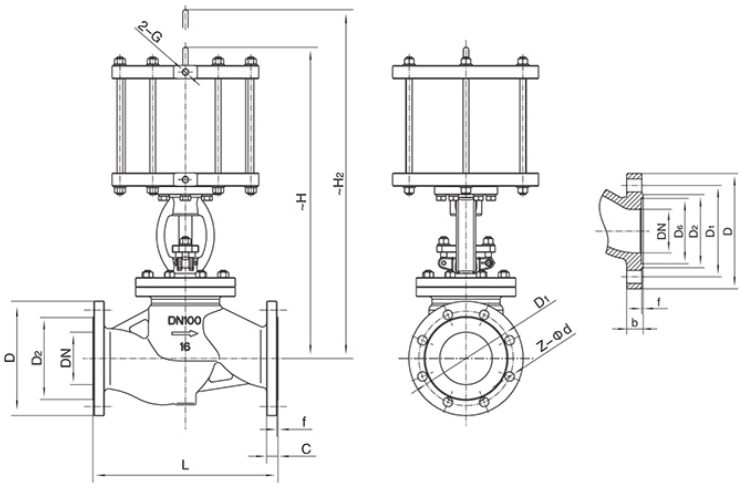

主要外形及连接法兰尺寸 ZTJ641H(W、F、Y)-16C/P/R Main Outline and Connecting Flange Size

公称通径 Nominal diameter DN	外形尺寸 Outline Size		连接法兰尺寸 Connecting Flange Size							气源接口 Air Source Interface
	L	~H	D	D_1	D_2	C	f	N	Φd	
15	130	291	95	65	46	14	2	4	14	1/4"
20	150	300	105	75	56	16	2	4	14	
25	160	353	115	85	65	16	2	4	14	
32	180	390	140	100	76	18	2	4	18	
40	200	518	150	110	84	18	3	4	18	
50	230	555	165	125	99	20	3	4	18	
65	290	630	185	145	118	20	3	4	18	
80	310	683	200	160	132	20	3	8	18	
100	350	745	220	180	156	22	3	8	18	3/8"
125	400	855	250	210	184	22	3	8	18	
150	480	870	285	240	211	24	3	8	22	
200	600	954	340	295	266	24	3	12	22	
250	730	1065	405	355	319	26	3	12	26	
300	850	1185	460	410	370	28	4	12	26	

注：根据不同的阀门扭矩、使用介质选配，不同的执行器型号，其相关尺寸随之变化。
Note:The relative sizes are subject to change responding to difference in valve torque, medium and actuator model.

ANSI标准气动法兰截止阀 ZTJ641H(W、F、Y)-Class150~600
ANSI Standard Pneumatic Flange Connecting Globe Valve

技术规范 Technique norm

设计依据 Design Basis		ANSI标准 Standard
设计标准 Design standard		ANSI B16.34、BS1873
结构长度 Face to face dimension	法兰连接 Flange connecting	ANSI B16.10
连接法兰尺寸 Connecting Flange Size		ANSI B16.5
试验和检验 Test & inspection		API 598

注：系列截止阀结构长度及连接法兰尺寸可根据用户要求设计制造。
Note：The structural length and connecting flange size of globe valve series can be designed and manufactured as per users' requirements.

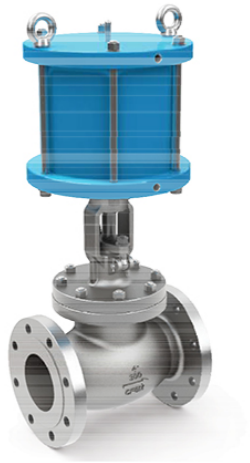

主要零件材质表 Form of Main Parts Materials

序号 No.	零件名称 Name of parts	材 质 Material		
		C	P	R
1	阀体 Body	A216-WCB	A351-CF8	A351-CF8M
2	垫片 Gasket	柔 石墨+不锈钢 Graphite+Stainless Steel	PTFE	PTFE
3	螺栓 Screw	A193-B7	A276-304	A276-316
4	阀瓣 Disc	A216-WCB+堆焊 A276-304或stelite PTFE	A351-CF8 PTFE	A351-CF8M PTFE
5	对开环 Split ring	A182-F304	A276-304	A276-316
6	阀瓣盖 Disc cover	A182-F304	A276-304	A276-316
7	阀杆 Stem	A276-410	A276-304	A276-316
8	螺帽 Scrwe Cap	A194-2H	A276-304	A276-316
9	吊环螺栓 Lifting Ring Screw	A192-2H	A276-304	A276-316
10	阀盖 Cover	A216-WCB	A351-CF8	A351-CF8M
11	螺栓 Screw	A194-2H	A276-304	A276-316
12	垫片 Gasket	A194-2H	A276-304	A276-316
13	填料 Packing	柔 石墨 Graphite	PTFE	PTFE
14	填料压盖 Packing Plate	A216-WCB	A351-CF8	A351-CF8M
15	螺帽 Screw Cap	A194-2H	A276-304	A276-316
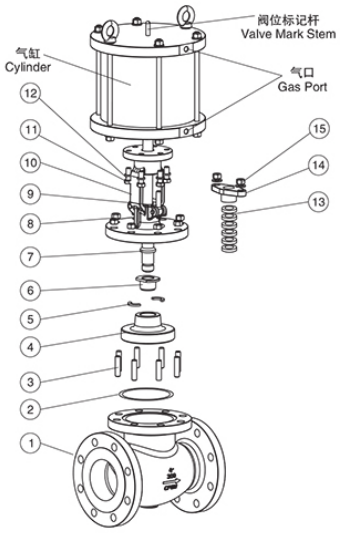
※注：系列截止阀主要零部件及密封密封阀座的材质可根据实际工况条件或用户特殊要求设计选用。
Note：The main spare parts and sealed seat material of globe valve series can be designed for options as per users' special requirements.