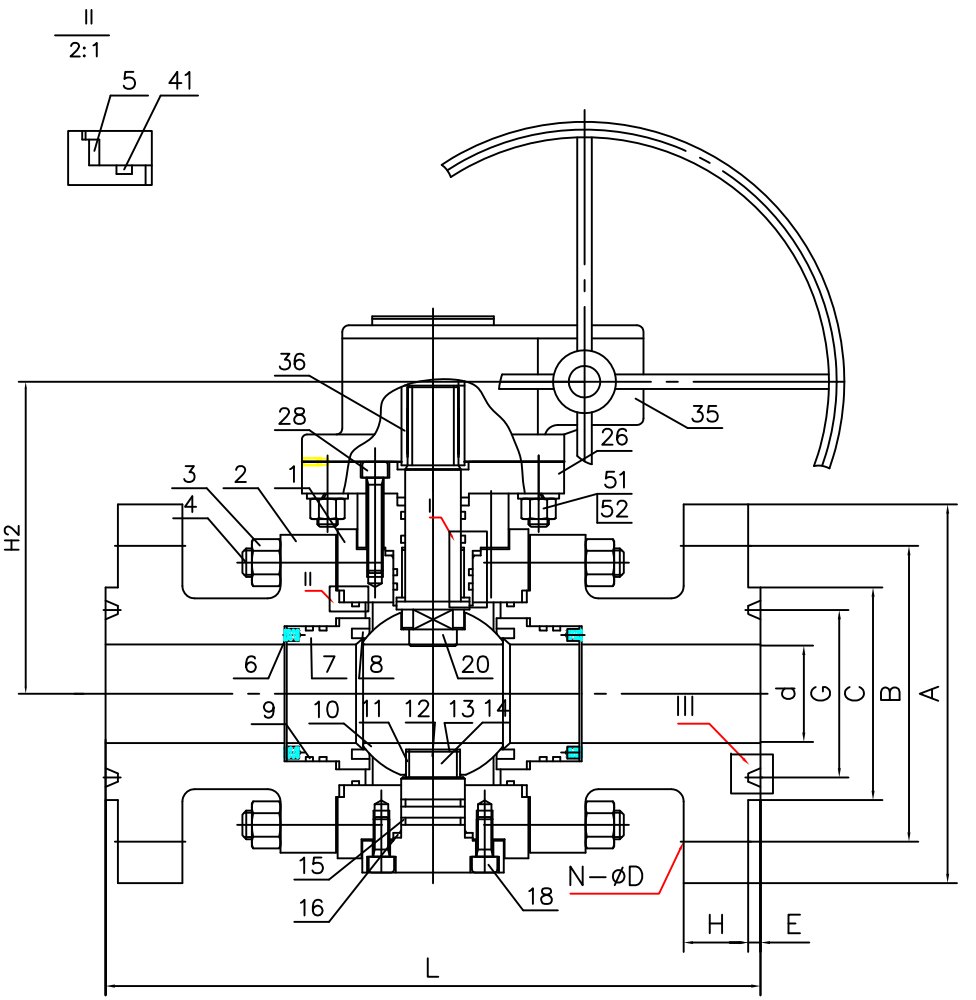

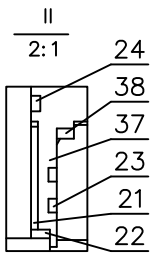

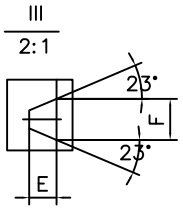

TECHNICAL SPECIFICATIONS

1. DESIGN & MANUFACTRE ACC TO API 6D.
2. TEMP. & PRESSURE ACC TO ANSI B16.34
3. FACE TO FACE ACC TO ANSI B16.10
4. FLANGE DIMENSIONS ACC TO ANSI B16.5.
5. TEST & INSPECTION ACC TO API 598.

ITEM	PART NAME	MATERIAL	REMARK	ITEM	PART NAME	MATERIAL	REMARK
16	GASKET			55	DRAIN PLUG		
15	O-RING			52	BOLT		
14	LOWER STEM			51	HEXAGON NUT		
13	GASKET			41	O-RING		
12	SPRING			38	GASKET		
11	RADIAL BEARING			37	FLANGE ADAPTER		
10	BALL			36	KEY		
9	O-RING			35	GEAR BOX		
8	SEAT INSERT			28	SCREW		
7	SEAT RING			26	GLAND		
6	SPRING			24	O-RING		
5	GASKET			23	O-RING		
4	BOLT			22	GASKET		
3	HEXAGON NUT			21	RADIAL BEARING		
2	BODY SIDE SECTION			20	STEM		
1	BODY MID SECTION			18	SCREW		

NPS	d	A	B	C	G	E	F	H	L	H2	N-ød	REMARK

Wenzhou Sn-Joe Flow Tech Equipment Co.,Ltd.
qiao@snjoe.com

Trunnion Mounted Forged Ball valve

DESIGN		CHECK		DRAWING No.
APPROVE				